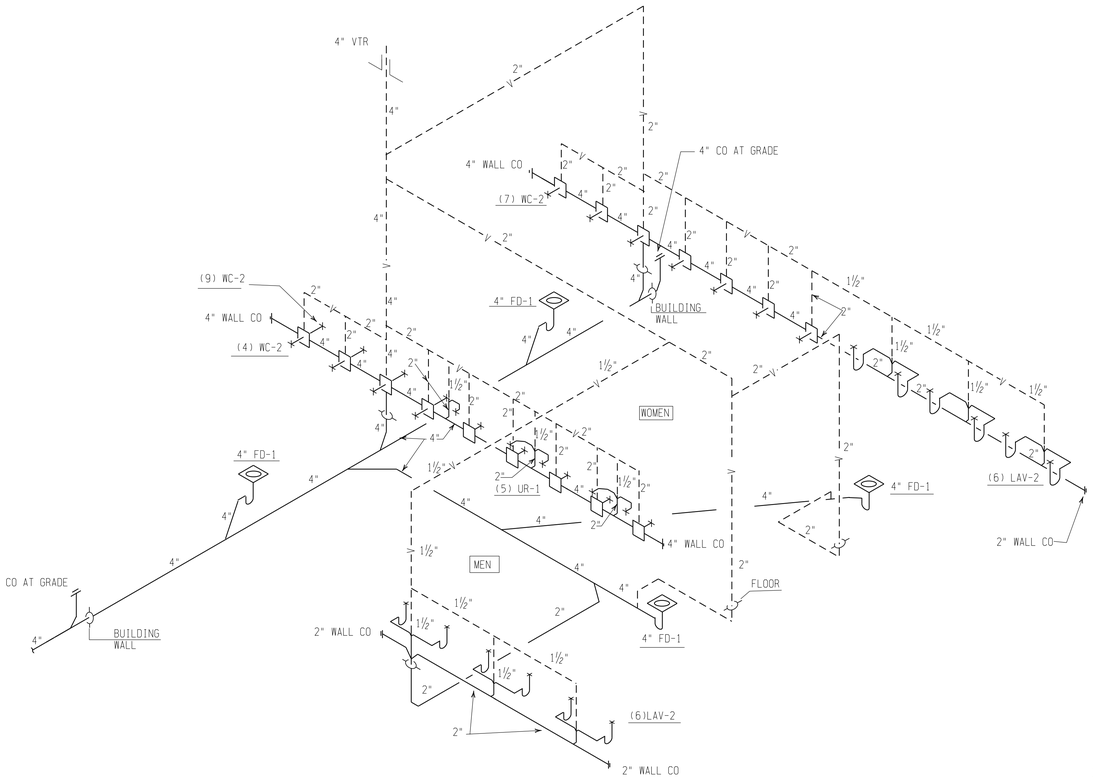

SANITARY & VENT PIPING ISOMETRIC

NO SCALE

9 / P1.2

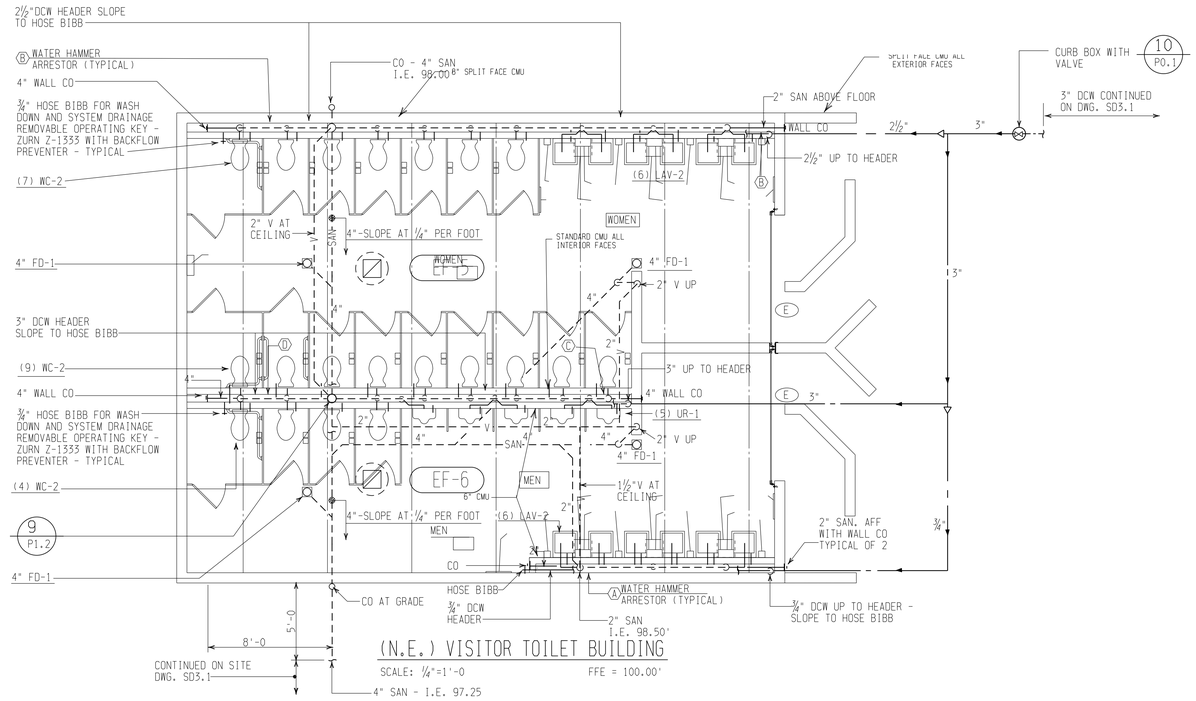

(N.E.) VISITOR TOILET BUILDING

SCALE: ¼"=1'-0 FFE = 100.00'

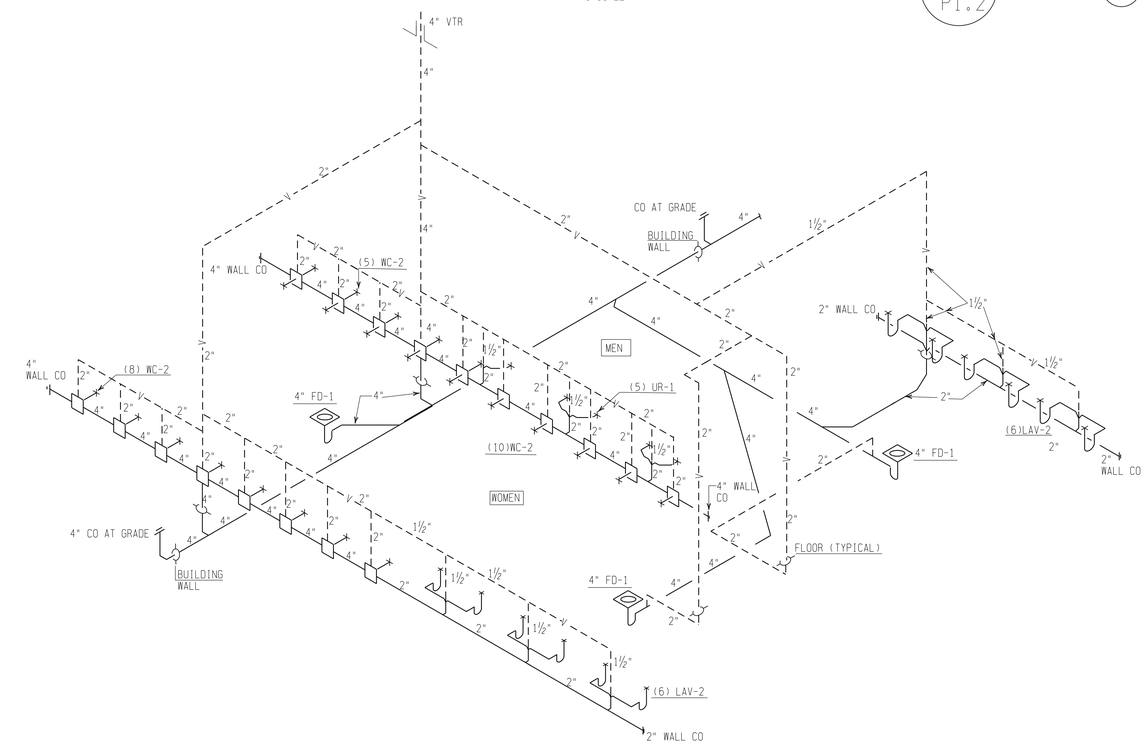

SANITARY & VENT PIPING ISOMETRIC

NO SCALE

NOTE:
1. DETAIL #8 IS OPPOSITE HAND OF DETAIL #7.

7 / P1.2 8 / P1.2

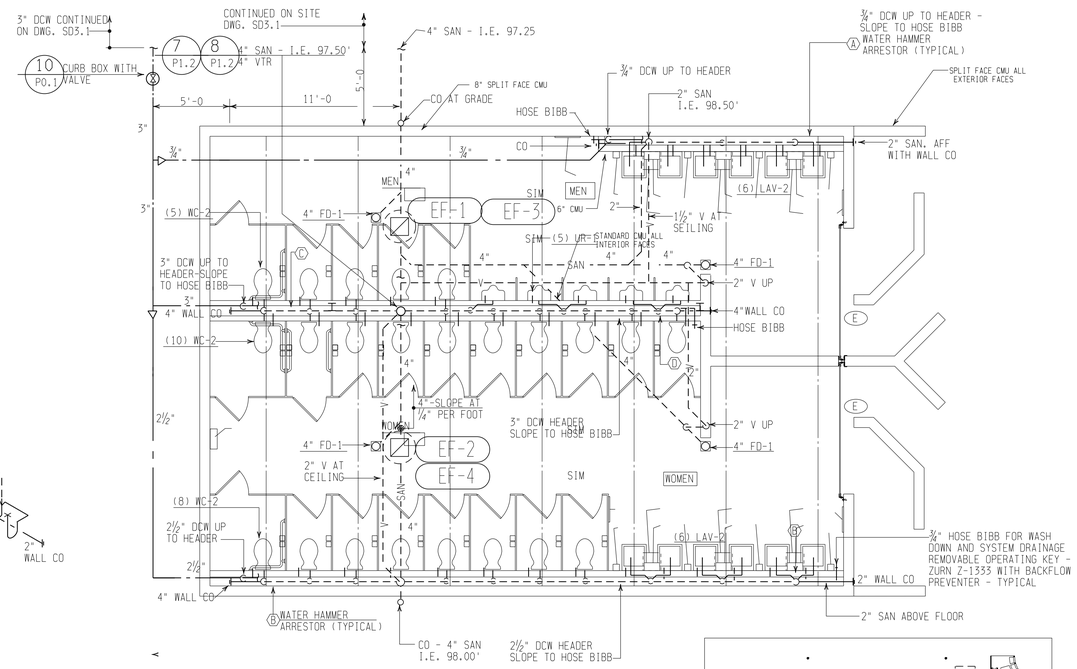

(S.E.) HOME TOILET BUILDING

(S.W.) HOME TOILET BUILDING OPPOSITE HAND

SCALE: ¼"=1'-0 FFE 100.00'

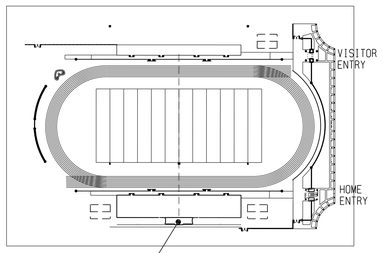

KEY PLAN

NOTE:

INSTALL PIPING (WATER AND SANITARY) SO THAT THESE SYSTEMS CAN BE DRAINED FOR WINTER.

NO.	DATE	SUBJECT
	6/12/97	ISSUED FOR BIDS - CONC./MAS.
	5/12/97	ISSUED FOR UNDERGROUND BIDS
	4/28/97	REVISED PLAN
	2-6-97	ISSUED FOR BIDS - STADIUM
	1-8-97	ISSUED FOR BIDS - GRANDSTANDS
	11-12-96	FINAL OWNERS REVIEW
	11-12-96	FINAL CHECK

REVISION OR ISSUE

DRAWN	NEO/MT
CHECKED	SSOE
DESIGNED	NEO/MT
DEPT.MGR.	JMK
PROJ.MGR.	KBK

SEAL

SSOE, INC.
ENGINEERS ARCHITECTS
1001 MADISON AVENUE TOLEDO, OHIO 43624
FAX 419-255-6101 TEL. 419-255-3830

JOB TITLE
Bedford Community Sta
8285 JACKMAN RD. TEMPERANCE , MICHIGAN
a project by
The Bedford High School Alumni Association & The Bedford Township Community
Bedford Public Schools
1623 STERNS RD. TEMPERANCE, MICHIGAN - 313-847-6736

DRAWING TITLE
1/4" FLOOR PLANS
TOILET ROOM BUILDINGS
PLUMBING

PROJECT NUMBER 96-1299
DRAWING NUMBER P1.2
SHEET OF

ARCH. CHEM. CIVIL ELEC.CTL. ELEC. MACH.DSGN. MECH. PROCESS SPEC. STRUCT.

96912.DGN 8/20/2013 2:46:52 PM